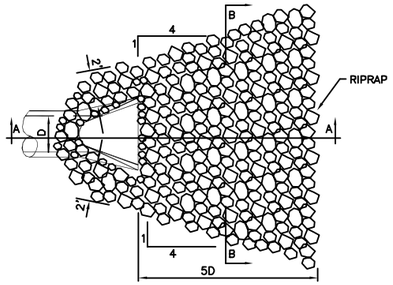

PLAN

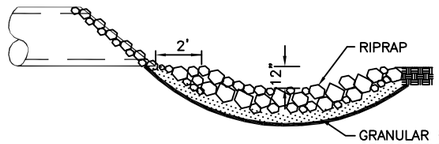

SECTION A–A

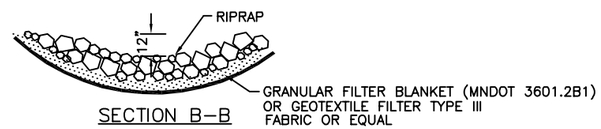

SECTION B–B

RIPRAP REQUIREMENTS

12" TO 24"	8 to 12 CY CL.2
27" TO 33"	14 to 20 CY CL.3
36" TO 48"	23 to 38 CY CL.3
54" AND UP	62 CY and up CL.4

(ONE CUBIC YARD IS APPROXIMATELY 2,800 LBS.)

NOTE
GRANULAR FILTER BLANKET REQUIRED
UNDER RIP RAP OR 2
LAYERS OF GEOTEXTILE FILTER TYPE III
OR ENGINEER APPROVED EQUIVALENT

POND INLET DETAIL

NTS

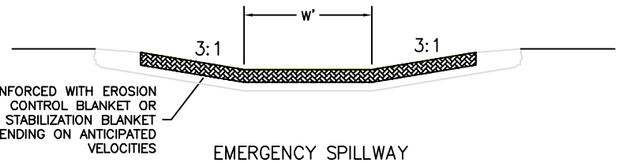

EMERGENCY SPILLWAY
CROSS–SECTION
A ——— A

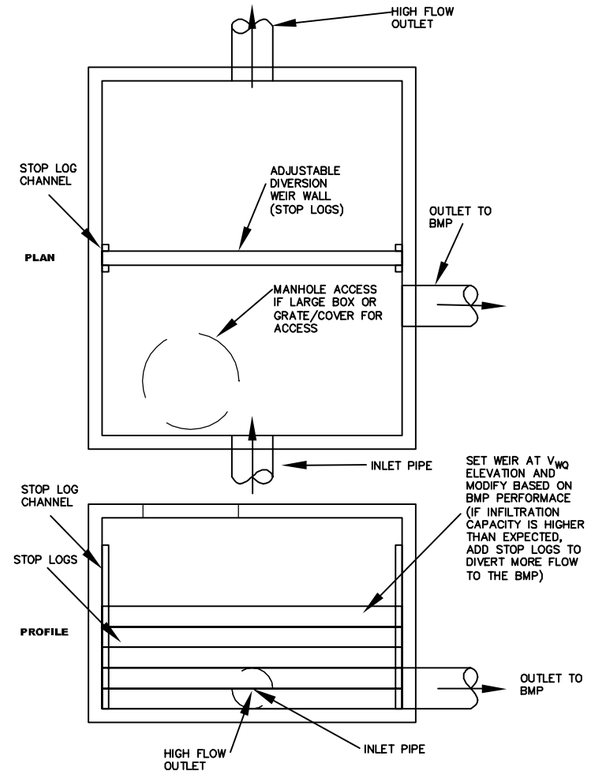

ADJUSTABLE DIVIERSION

NTS

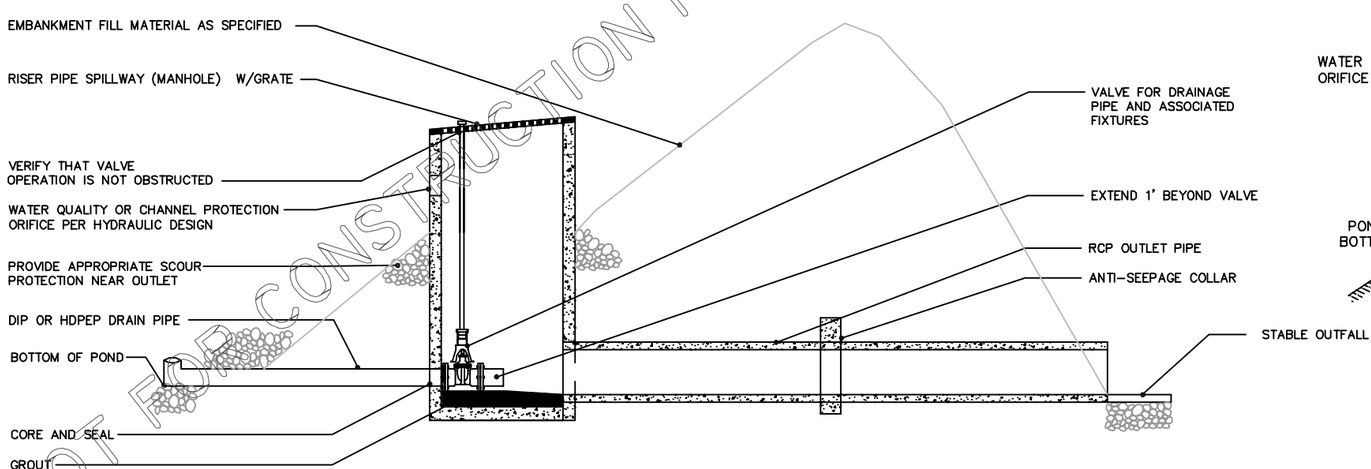

MULTI–STAGE OUTLET STRUCTURE (ORIFICE EXAMPLE)

NTS

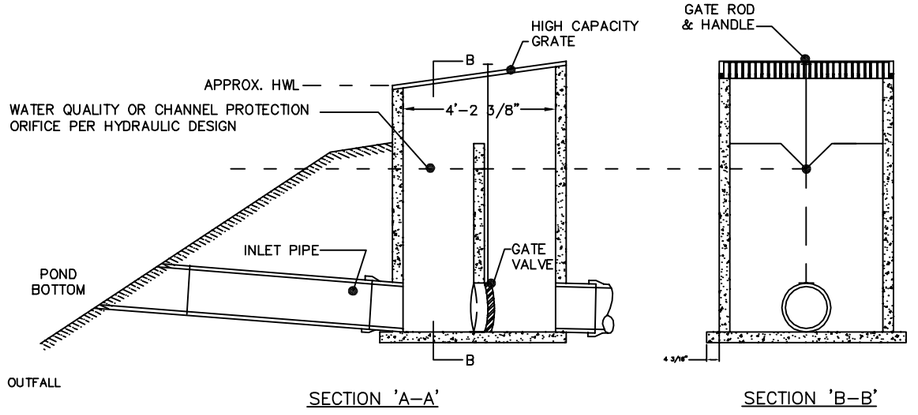

SECTION 'A–A'

SECTION 'B–B'

MULTI–STAGE OUTLET STRUCTURE (WEIR EXAMPLE)

NTS

NOT FOR CONSTRUCTION PURPOSES

NO.	REVISION DESCRIPTION	DATE	BY

I hereby certify that this plan was prepared by me or under my direct supervision and that I am a duly Licensed Professional Engineer under the laws of the State of Minnesota

Print Name:

Sign Name:

Date License No.

Date

Designed By

Drawn By

Minnesota Pollution Control Agency
520 Lafayette Road
St. Paul, MN 55155-4194
Phone: (651)-296-6300
TTY: (651)-282-5332
WEBSITE:www.pca.state.mn.us/

2005 MINNESOTA STORMWATER MANUAL

OUTLET STRUCTURE DETAILS

Sheet No. of Sheets